MB JEREMIE

SOFA BED

milano
SMART LIVING 100% ITALIAN MADE

200 Lexington Avenue, Suite 103 . New York, New York 10016
www.milanosmartliving.com | + 1 212 729 1938

MB JEREMIE

SOFA BED

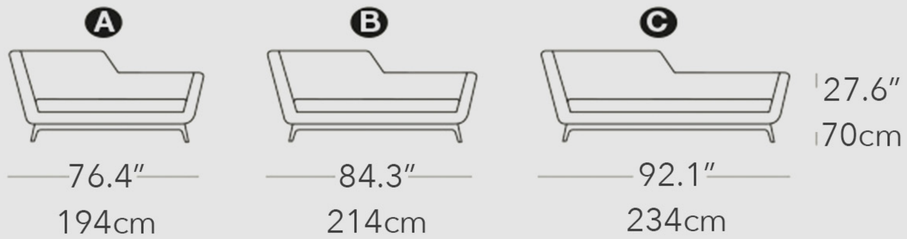

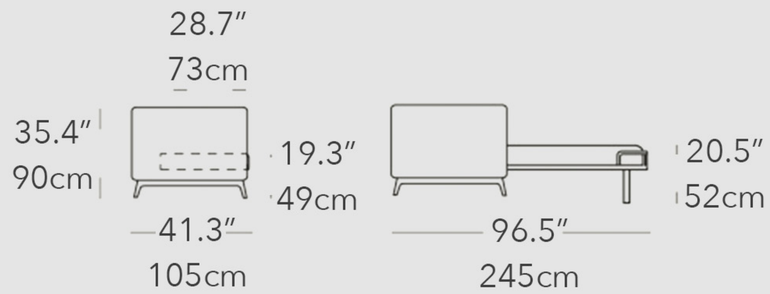

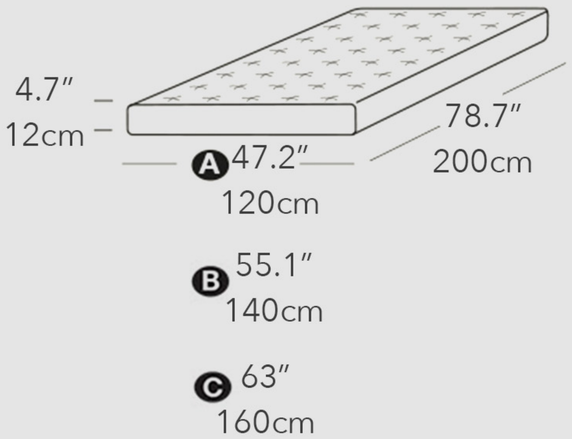

milano
SMART LIVING 100% ITALIAN MADE

200 Lexington Avenue, Suite 103 . New York, New York 10016
www.milanosmartliving.com | + 1 212 729 1938