200 LEXINGTON AVENUE . SUITE 711 . NY, NY 10016
(p) +1.212.729.1938 (e) INFO@MILANOSMARTLIVING.COM

milano SMART LIVING 100% ITALIAN MADE

# AC CIA

The "AC CIA" is a practical coffee to dining room table. The height can be adjusted anywhere from 25 cm to 76 cm.
This table top can expand to 136 cm.

Top available in laminate, wood, open pore lacquer, mortar look, glass and ceramic
X base available in inox (stainless), chrome, matte white, black, graphite or taupe

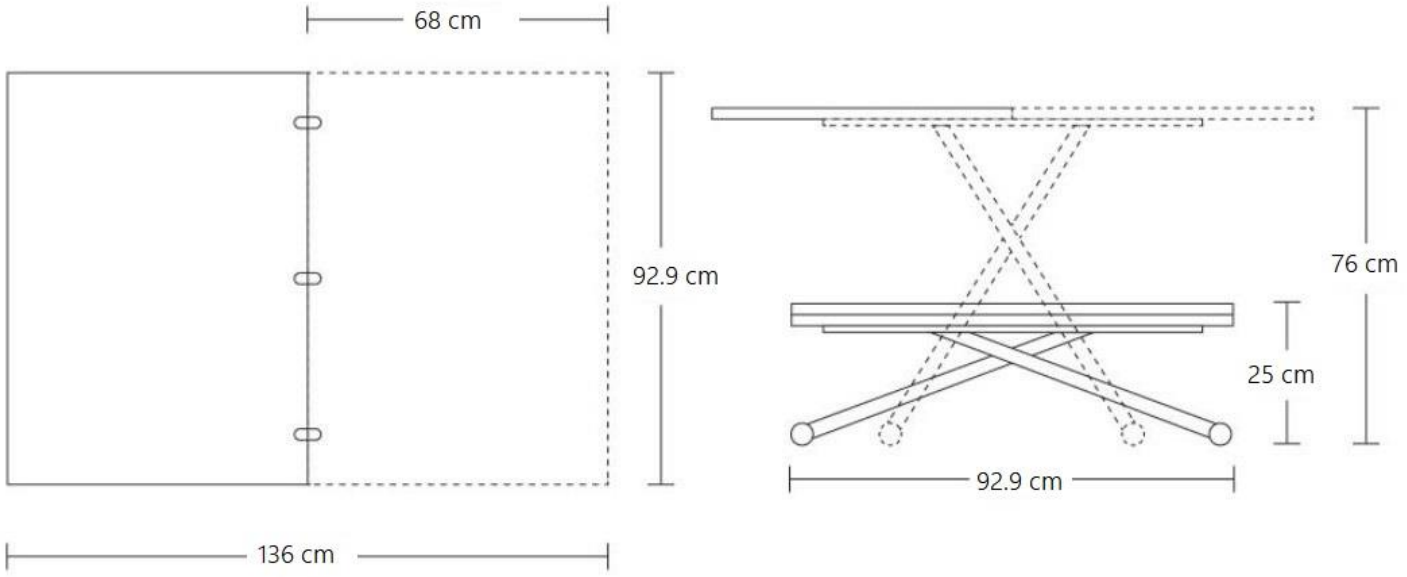

200 LEXINGTON AVENUE . SUITE 711 . NY, NY 10016
(p) +1.212.729.1938 (e) INFO@MILANOSMARTLIVING.COM



# AC CIA

## **FINITURE PIANO** - *FINITIONS PLATEAU - TOP FINISHES*

| | CODICE - *CODE* | FINITURA - *FINITION - FINISH* |
|---|---|---|
| **NOBILITATO** - *MÉLAMINE - MELAMINE* | | |
| | N05 | BIANCO MATRIX |
| | N16 | FANGO |
| | N17 | BIANCO LISCIO |
| | N18 | ROVERE ORLEANS BRUNO |
| | N19 | ROVERE ORLEANS SABBIA |
| | N20 | NATURAL HALIFAX OAK |
| | N21 | PINO JACKSON |
| | N23 | CEMENTO |
| | N24 | ARDESIA |
| | N25 | VINTAGE CHIARO |
| **LEGNO** - *BOIS - WOOD* | | |
| | W01 | ROVERE NATURALE |
| | W02 | ROVERE GRIGIO |
| | W03 | ROVERE TABACCO |
| | W04 | ROVERE NODATO |
| | W06 | ROVERE JUTA |
| | W07 | ROVERE FUMÉ |
| **LACCATO** - *LAQUE - LACQUERED* | | |
| **PORO APERTO** - *PORES OUVERTS - OPEN PORE* | L31 | BIANCO LUCE |
| | L32 | BIANCO PANNA |
| | L33 | BIANCO VELA |
| | L34 | GRIGIO CORDA |
| | L35 | GRIGIO CANAPA |
| | L39 | ROSSO ARAGOSTA |
| | L40 | TORTORA |
| **EFFETTO MALTA** - *EFFET-BÉTON - MORTAR LOOK* | | |
| | E01 | CORTEN BLACK |
| | E02 | CORTEN GOLD |
| | E03 | CORTEN SILVER |
| | E04 | METALLI VISSUTI NICHEL |
| | E05 | METALLI VISSUTI RAME |
| | E06 | BETON TORTORA |
| | E07 | BETON NERO |
| | E08 | BETON GRIGIO SCURO |
| | E09 | BETON GRIGIO CHIARO |
| | E10 | PIETRA SPATOLATA TORTORA |
| | E11 | PIETRA SPATOLATA NOTTE |
| | E12 | PIETRA SPATOLATA CENERE |
| | E13 | PIETRA SPATOLATA PERLA |
| | E14 | PIETRA SPATOLATA ANTRACITE |
| | E15 | PIETRA SPATOLATA TRAVERTINO |
| | E17 | PIETRA SPATOLATA ANTRACITE ARDESIA ALLUMINIO |
| | E19 | BIANCO ASSOLUTO |
| **VETRO** - *VERRE - GLASS* | | |
| | G01 | VETRO BIANCO |
| | G02 | VETRO TORTORA |
| | G03 | VETRO NERO |
| | G04 | VETRO BIANCO ACIDATO |
| | G05 | VETRO TORTORA ACIDATO |
| | G06 | VETRO NERO ACIDATO |
| **CERAMICA** - *CÉRAMIQUE - CERAMIC* | | |
| | K01 | SALE |
| | K02 | TERRA |
| | K03 | PIOMBO |

## **FINITURE BASE** - *FINITIONS PIÉTEMENT - BASE FINISHES*

| | CODICE - *CODE* | FINITURA - *FINITION - FINISH* |
|---|---|---|
| **METALLO** - *MÉTAUX - METALS* | | |
| | M02 | VERN. GRISOU GOFFRATO |
| | M03 | VERN. BIANCO OPACO |
| | M04 | VERN. NERO OPACO |
| | M05 | CROMO LUCIDO |
| | M07 | CROMO OPACO |
| | M09 | CROMO NERO LUCIDO |
| | M10 | CROMO NERO OPACO |
| | M11 | VERN. GRAFITE GOFFRATO |
| | M12 | VERN. TORTORA OPACO |