200 LEXINGTON AVENUE . SUITE 711 . NY, NY 10016
(p) +1.212.729.1938 (e) INFO@MILANOSMARTLIVING.COM

milano
SMART LIVING 100% ITALIAN MADE

BE EASY
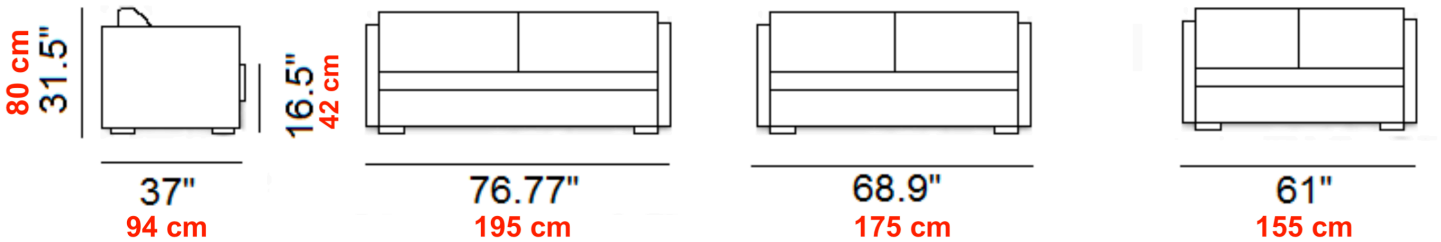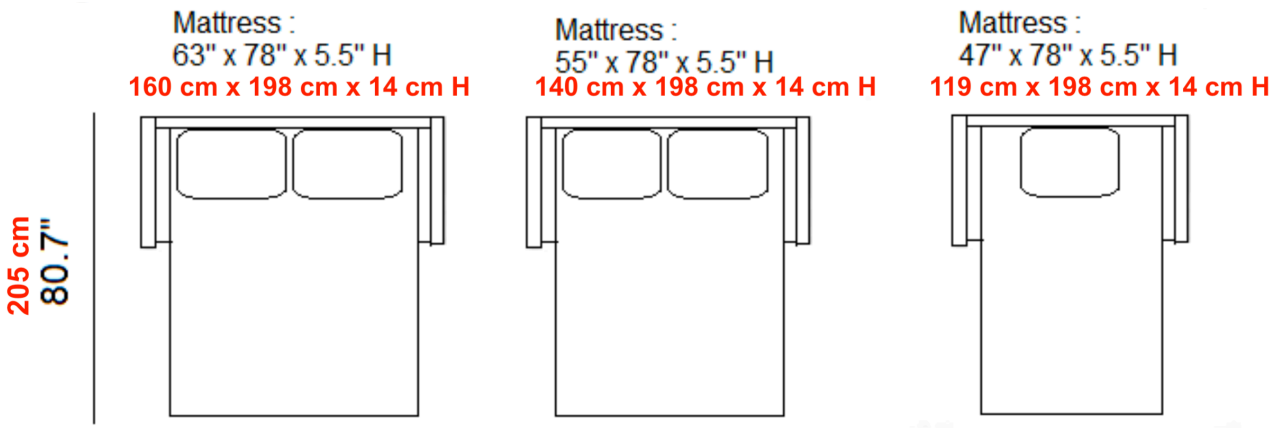
200 LEXINGTON AVENUE . SUITE 711 . NY, NY 10016
(p) +1.212.729.1938 (e) INFO@MILANOSMARTLIVING.COM