200 LEXINGTON AVENUE . SUITE 103 . NY, NY 10016
(p) 212 . 729 . 1938 (e) INFO@MILANOSMARTLIVING.COM

EF KOS
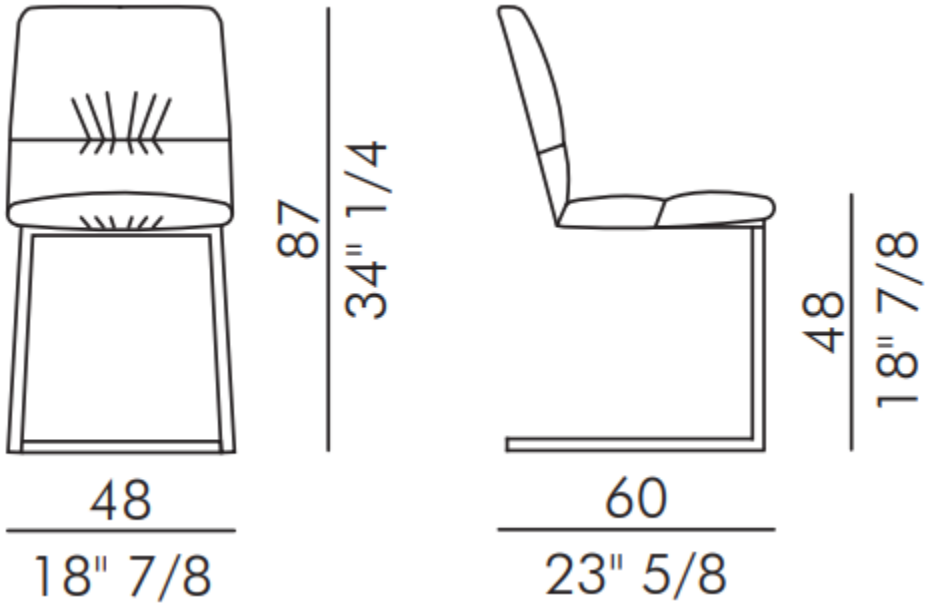
UPHOLSTERED CHAIR-AVAILABLE IN LEATHER, ECO LEATHER, OR FABRIC